4R1187B
K1
K2
K3
K4
K5
K6
U1
U2
U3
U4
U5
U8
U9
U10
U11
U12
R64
R38
R52
R74
R50
R35
R67
R66
R68
R69
R56
R70
R71
R45
R13
R54
R58
R57
R59
R60
R55
R53
R63
R62
R61
C33
C34
C35
C36
C48
C45
C8
C9
C10
C11
C2
C3
C5
C7
C1
C14
C18
C19
C15
C13
C12
C28
C52
C51
C53
C46
C49
C66
C38
C29
C50
C44
C47
C23
C22
C21
C24
C25
C27
C26
C32
C31
C30
C37
C4
D1
D2
D3
D4
D6
D7
D8
D9
D10
D11
D12
D13
R1
R2
R3
R4
R5
R8
R9
R11
R10
R12
R39
R18
R25
R19
R26
R23
R20
R27
R24
R16
R33
R17
R31
R32
R15
R22
R14
R21
R42
R36
R37
R34
R46
R48
R49
R40
R41
R43
R44
R51
R29
R28
R30
R65
R73
R72
R75
R111
R110
Z1
Z2
Z3
Z4
Z5
Z6
Z7
Z8
Z9
Z10
Z11
Z12
Z13
Z14
Z17
Z18
Z19
ZT2
P1
M1

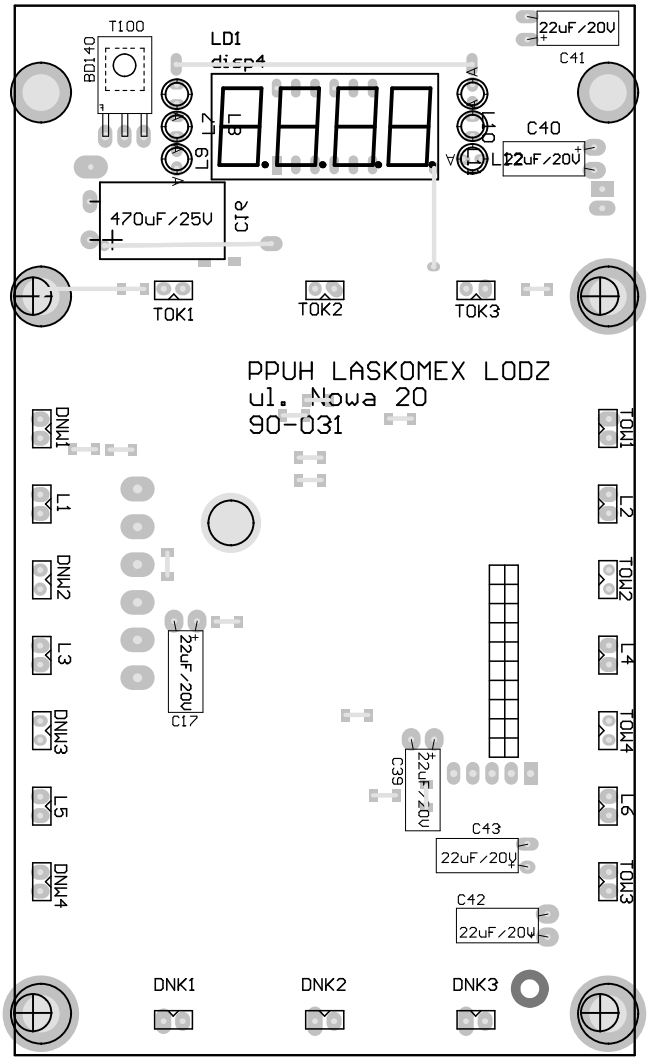
T100
BD140
LD1
disp4
L7
L8
L9
L10
L11
L12
C40
22uF/20V
C41
22uF/20V
470uF/25V
C1
TOK1
TOK2
TOK3
PPUH LASKOMEX LODZ
ul. Nowa 20
90-031
DNW1
L1
DNW2
L3
DNW3
L5
DNW4
TOW1
L2
TOW2
L4
TOW4
L6
TOW3
C17
22uF/20V
C39
22uF/20V
C43
22uF/20V
C42
22uF/20V
DNK1
DNK2
DNK3

4R1187B
ULN2003
4094_2
4093
4051
4021
4060
4001
ARK200/3